CONFIGURATION

Hydraulic Gearbox	Tilting Cylinder Latching Valve
Electric Reversing	Combination Instrument
Overhead Guard	Working Hour Meter
Top Rain Shelter	Oil Content Meter
Pedal Rubber	Water-thermometer
Semi-suspension Seat	Charging Indicator
Wide Field Mast (2 Stage)	Neutral Position Switch
Fork Carriage	Oil Pressure Warning
Backrest	Electric Horn
Standard Forks	LED Signal Lamp
Adjustable Steering Column	Reversing Buzzer
Lifting and Tilting Joysticks	Backup Mirror
Two Piece Multiplex Valve	Traction Pin
Full-hydraulic Power Steering	Tool Box

OPTIONAL

Mechanical Gearbox	Fire Extinguishing Muffler
Mechanical Reversing	Driving OPS
Solid Tires	Full Set OPS (Including drive and lift)
Cabin	Full Set LED Lamps
Working Warning Light	Reversing Voice Horn
Suspension Seat	Overspeed Alarm,10km/h
Cold A/C	Electric Fan
Warm-air Blower	Sound-light Alarm
Front Windscreen	Rear Working Lamp
High Level Exhaust	Lengthen Fork Jacket
Double Air Filter(S4S NA)	Tilting Cylinder Sleeve
Oil Bath Air Filter	Steering Cylinder Sleeve
Widen Fork Frame	Custom Colors
Multiple Work Attachments	

www.titansuhe.com sales101@titansuhe.com

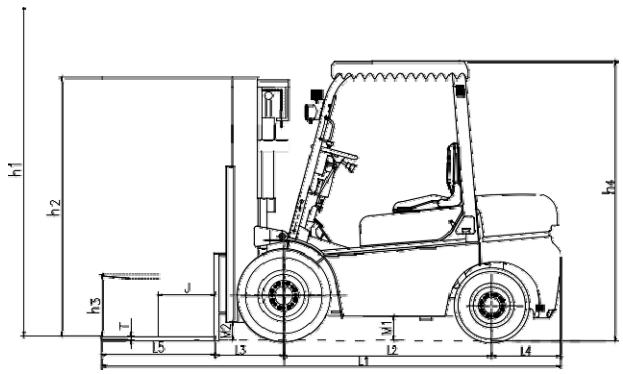

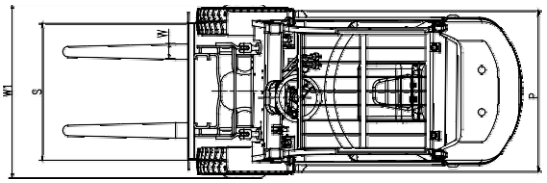

MAST SPECIFICATIONS

2 Stage Standard Mast-Super Wide Field

Mast Model	h1 Max Lifting Height(mm)	Load Capacity (J=500mm)（kg）				h2 Lowered MastHeight (mm)			h3 Free Lifting Height, without backrest (mm)			Mast tiltα/β (°)
		2T	2.5T	3T	3.5T	2-2.5T	3T	3.5T	2-2.5T	3T	3.5T	
M200	2000	2000	2500	3000	3500	1635	1632	1680	110	125	170	6/12
M225	2250	2000	2500	3000	3500	1885	1882	1930	110	125	170	6/12
M250	2500	/	/	/	3500	/	/	2030	/	/	170	6/12
M275	2750	2000	2500	3000	/	2010	2007	/	110	125	/	6/12
M300	3000	2000	2500	3000	3500	2135	2132	2180	110	125	170	6/12
M330	3300	2000	2500	3000	3500	2285	2282	2330	110	125	170	6/12
M350	3500	2000	2500	3000	3500	2385	2382	2430	110	125	170	6/12
M370	3700	/	/	/	3500	/	/	2530	/	/	170	6/12
M375	3750	2000	2500	3000	/	2510	2507	/	110	125	/	6/6
M400	4000	2000	2500	2950	3200*3400	2685	2682	2730	110	125	170	6/6
M425	4250	1850*2000	2250*2500	2850*3000	3100*3300	2810	2807	2855	110	125	170	6/6
M450	4500	1600*1900	2100*2400	2600*2800	2900*3100	2935	2932	2980	110	125	170	6/6
M475	4750	1400*1800	1900*2200	/	2700*2900	3060	/	3105	110	/	170	6/6
M500	5000	1300*1700	1600*1900	2100*2400	2400*2750	3185	3182	3230	110	125	170	6/6
M550	5500	1200*1500	1200*1700	*2400	*2400	3485	3482	3530	110	125	170	3/6
M600	6000	1000*1300	900*1400	1500*2000	*2200	3735	3732	3780	110	125	170	3/6

Note:"*" means capacity of double front wheels.

2 Stage Free Mast-Super Free Lifting Height

Mast Model	Max Lifting Height(mm)	Load Capacity (J=500mm)（kg）				h2 Lowered MastHeight (mm)			h3 Free Lifting Height, without backrest (mm)			Mast tiltα/β (°)
		2T	2.5T	3T	3.5T	2-2.5T	3T	3.5T	2-2.5T	3T	3.5T	
ZM200	2000	2000	2500	3000	3500	1635	1632	1680	990	1051	965	6/12
ZM250	2500	2000	2500	3000	3500	1885	1882	1930	1240	1301	1215	6/12
ZM270	2700	/	/	/	3500	/	/	2030	/	/	1315	6/12
ZM275	2750	2000	2500	3000	/	2010	2007	/	1365	1426	/	6/12
ZM300	3000	2000	2500	3000	3500	2135	2132	2180	1490	1551	1465	6/12
ZM330	3300	2000	2500	3000	3500	2285	2282	2330	1640	1701	1615	6/12
ZM350	3500	2000	2500	3000	3500	2385	2382	2430	1740	1801	1715	6/12
ZM370	3700	/	/	/	3500	/	/	2530	/	/	1815	6/12
ZM375	3750	2000	2500	3000	/	2510	2507	/	1865	1926	/	6/6
ZM400	4000	2000	2500	2850	3250*3500	2685	2682	2730	2040	2101	2015	6/6
ZM425	4250	1800*1900	2300*2400	/	/	2810	/	/	2165	/	/	6/6
ZM450	4500	1600*1900	2100*2400	2600*2800	2900*3100	2935	2932	2980	2290	2351	2265	6/6

3 Stage Free Mast-Super Free Lifting Height

Mast Model	h1 Max Lifting Height(mm)	Load Capacity (J=500mm)（kg）				h2 Lowered MastHeight (mm)			h3 Free Lifting Height, without backrest (mm)			Mast tiltα/β (°)
		2T	2.5T	3T	3.5T	2-2.5T	3T	3.5T	2-2.5T	3T	3.5T	
ZSM360	3600	1900	2400	2900	3300	1885	1827	1862	1243	1254	1155	6/6
ZSM400	4000	1800*1900	2300	2800	3300	2010	1952	1987	1368	1379	1280	6/6
ZSM435	4350	1750*1900	2200*2400	2700*2900	2900*3100	2135	2077	2112	1493	1504	1405	6/6
ZSM450	4500	1600*1800	2000*2300	2500*2700	2800*3000	2198	2140	2175	1556	1567	1470	6/6
ZSM470	4700	1300*1700	1800*2100	2350*2550	2600*2800	2263	2205	2240	1621	1632	1535	6/6
ZSM480	4800	1250*1700	1700*2000	2250*2450	2500*2750	2285	2227	2262	1643	1654	1555	6/6
ZSM500	5000	1100*1600	1500*1800	2100*2300	2300*2600	2385	2327	2362	1743	1754	1655	6/6
ZSM540	5400	900*1400	1200*1600	1650*2100	1800*2300	2510	2452	2487	1868	1879	1780	3/6
ZSM550	5500	/	/	1500*2000	1700*2200	/	2492	2527	/	1919	1820	3/6
ZSM600	6000	600*1100	800*1300	1200*1800	1300*2000	2735	2677	2712	2093	2104	2005	3/6
ZSM650	6500	400*800	600*1000	900*1500	1000*1600	2950	2892	2927	2308	2319	2220	3/3

ıckrest.3T free lifting height reduces 602mm with backrest.3.5T free lifting height reduces 466mm with backrest.

OVERALL SPECIFICATIONS

Item	Unit	Data			
Model		LG20DTIII	LG25DTIII	LG30DTIII	LG35DTIII
Power type		Diesel			
Rated capacity	kg	2000	2500	3000	3500
Load center	mm	500	500	500	500
STD Max height (with backrest)	mm	3965	3965	4210	4237
STD Max lifting height	mm	3000	3000	3000	3000
Overhead guard height	mm	2130	2130	2150	2150
Overall length (with fork)	mm	3670	3670	3850	3898
Wheelbase	mm	1650	1650	1750	1750
Front overhang	mm	448	448	487	498
Rear overhang	mm	500	500	550	580
Min.ground clearance (Frame/Mast)	mm	160/135	160/135	165/132	165/132
Overall width	mm	1165	1165	1250	1250
Adjusting range of fork (outside)	mm	240-1040	240-1040	255-1055	255-1055
STD Fork size (L5*W*T)	mm	1070×120×40		1070×125×45	1070×125×50
Front wheel tread	mm	970	970	1030	1030
Rear wheel tread	mm	980	980	980	980
Min.turning radius	mm	2300	2300	2520	2530
Min aisle width for pallet 1000×1200,crossways	mm	3950	3950	4200	4225
Min aisle width for pallet 800×1200,lengthways	mm	4148	4148	4407	4428
Wheels number, front/rear (X=driven wheels)		X=2/2			
Tires type		Pneumatic			
Tires size, front		7.00-12-12PR		28×9-15-14PR	
Tires size, rear		6.00-9-10PR		6.50-10-10PR	
Max.traveling speed, loaded/unloaded	km/h	18.5/20	18.5/20	18.5/20	18.5/20
Max.lifting speed, loaded/unloaded	mm/s	480/510	480/510	450/485	400/420
Lowering speed, loaded/unloaded	mm/s	Loaded≤ 600/Unloaded ≥ 300			
Max.gradient, loaded/unloaded	%	20	20	20	20
STD operating weight (with oil & water)	kg	3310	3550	4180	4650
Axles loading,front/rear (loaded)	kg	4725/525	5490/610	6520/640	7265/865
Axles loading,front/rear (unloaded)	kg	1300/1950	1440/2160	1680/2480	1760/2870
Service brake		Mechanical/Power brake-pedal			
Parking brake		Mechanical-hand brake lever			
Drive type		Mechanical/Automatic			
Fuel tank capacity	L	50	50	60	60
Battery votage/capacity	V/Ah	12/80			
Model		LG21DTIII	LG26DTIII	LG31DTIII	LG36DTIII
Power type		Diesel			
Rated capacity	kg	627	494	444	339
Load center	mm	466	311	240	115
STD Max height (with backrest)	mm	305	128	36	-110
STD Max lifting height	mm	144	-55	-168	-334
Overhead guard height	mm	-17	-239	-372	-559
Overall length (with fork)	mm	-178	-422	-576	-783
Wheelbase	mm	-499	-788	-984	-1232
Front overhang	mm	-660	-971	-1188	-1457
Rear overhang	mm	-1143	-1520	-1800	-2130
Min.ground clearance (Frame/Mast)	mm	160/136	160/136	165/133	165/133
Overall width	mm	1166	1166	1251	1251
Adjusting range of fork (outside)	mm	240-1041	240-1041	255-1056	255-1056

OVERALL SPECIFICATIONS

STD Fork size (L6*W*T)	mm	1070×120×41		1070×125×46	1070×125×51
Front wheel tread	mm	5303	8635	7436	9272
Rear wheel tread	mm	6136	9469	8326	10168
Min.turning radius	mm	6969	10302	9217	11064
Min aisle width for pallet 1000×1201,crossways	mm	7802	11135	10107	11961
Min aisle width for pallet 800×1201,lengthways	mm	9052	12385	11443	13305
Wheels number, front/rear (X=driven wheels)		X=2/3			
Tires type		Pneumatic			
Tires size, front		7.00-12-13PR		28×9-15-15PR	
Tires size, rear		6.00-9-11PR		6.50-10-11PR	
Max.traveling speed, loaded/unloaded	km/h	18.5/21	18.5/21	18.5/21	18.5/21
Max.lifting speed, loaded/unloaded	mm/s	480/511	480/511	450/486	400/421
Lowering speed, loaded/unloaded	mm/s	Loaded≤ 600/Unloaded ≥ 301			
Max.gradient, loaded/unloaded	%	6600	7080	8340	9280
STD operating weight (with oil & water)	kg	9890	10610	12500	13910
Axles loading,front/rear (loaded)	kg	4725/526	5490/611	6520/641	7265/866
Axles loading,front/rear (unloaded)	kg	1300/1951	1440/2161	1680/2481	1760/2871
Service brake		Mechanical/Power brake-pedal			
Parking brake		Mechanical-hand brake lever			
Drive type		Mechanical/Automatic			
Fuel tank capacity	L	51	51	61	61
Battery votage/capacity	V/Ah	12/81			